coats

COATS PROBALANCE™ E900

A High Performing Diagnostic Wheel Balancer for High Volume Shops

DESIGNED AND BUILT IN THE USA

Every tire dealer needs wheel balancers they can count on – for measuring and correcting imbalances and creating smooth rides in passenger cars and light trucks.

THE COATS PROBALANCE™ E900

Your Modern Workhorse

The Coats ProBalance™ E900 is a high performing direct drive wheel balancer with added ride quality diagnostics. It's up to 10x faster than non-direct drive balancers, and the only premium wheel balancer on the market today with a 10-year warranty on the motor. It's your modern workhorse.

Advanced Technology & Diagnostics

The technology built into the E900 is designed to let techs precisely balance wheels and test drive the wheel assembly on the balancer, assessing tire and wheel geometry to deliver a smoother ride and fewer customer returns for rework.

Direct Drive

Technology that delivers a superior balancing result, the first time, every time, without frequent calibrations required by other manufacturers' systems. The Direct Drive system integrates the wheel balancer motor and spindle into a single, factory pre-balanced assembly with ZERO noise and a 10 year direct drive motor warranty.

Diagnostic Roller & ProMatch

The E900 utilizes a diagnostic roller and ProMatch feature to measure radial runout and address wheel and tire shape and defect issues before weights are applied.

Smart Design, Ultimate Usability

The E900 touchscreen interface feels like you're using a smart phone. It streamlines data collection, reducing the amount of manual input required for intensive areas like wheel diameter and width.

Be a Pro with the right equipment that brings the right results.

Built for Absolute Precision

The E900 is part of the ProBalance portfolio which is our full range of wheel balancers for passenger vehicles and light trucks with validated claims for durability, serviceability, ease of use, and uptime – and it's the only one in the industry with a 10-year motor warranty. We were the first to innovate with direct drive technology.

Tested by

REAL SHOPS

Designed and built in the USA

Maximum Serviceability

The E900 is designed to be serviced by Coats Connect Service. Our service network is staffed coast to coast by our own factory-trained techs who are supported by central dispatch actively managing from call to completion. Plus, the E900 is equipped for digital connectivity and future, remote diagnostics and maintenance.

OEM PARTS

Available exclusively through Coats

Complete your shop

We know tire changers and wheel balancers are mission critical technologies in your shop. Pair the ProBalance E900 with the Maxx 90 -- it's our premium Maxx tire changer that tackles a wide array of wheel assemblies the same way, every time and makes the manual process of changing tires faster and easier for your techs.

A package engineered to keep work flowing.

Zero Guesswork.

Wheel balancing is done right the first time, every time with the proper equipment and techniques. Less time is spent training technicians and managing negative comebacks and more time is dedicated to turning more cars per day with profit driving technology.

The Coats Pro Series Portfolio

The Coats Pro Series, which are the measurement and diagnostic systems your shop needs to boost the ride quality and safety of your customers' vehicles. Our portfolio includes the wheel balancers, aligners, and vehicle inspection systems that identify and correct tough issues like imbalance, alignment, and tread depth.

For more information visit coatscompany.com

or call us at

800-688-6359

coats

coats

Pro Series

ProBalance™ E900 Wheel Balancer

Specifications

Balancing Modes	5
Wheel Diameter Range	8”- 30”
Wheel Width Range	2” - 20”
Maximum Tire Diameter	Up to 44”
Maximum Tire Weight	160 lbs.
Shaft Diameter	40 mm
Footprint	57”w x 55”d x 75”h
Interface	Touchscreen
Automatic Data Entry	Offset/Diameter/Width
Electrical Requirements	220v, 1ph or 220v, 3ph
Warranty	3 Year Parts, 6 Months Labor, 10 Year Direct Drive Motor Warranty
Part Numbers	800PROE900 - 1ph 800PROE90001 - 3ph 8KE900PROKIT (kit includes Auto Down Wheel Lift and Adjustable Pin Plate Set)

(Auto Down Wheel lift shown is included in 8KE900PROKIT)

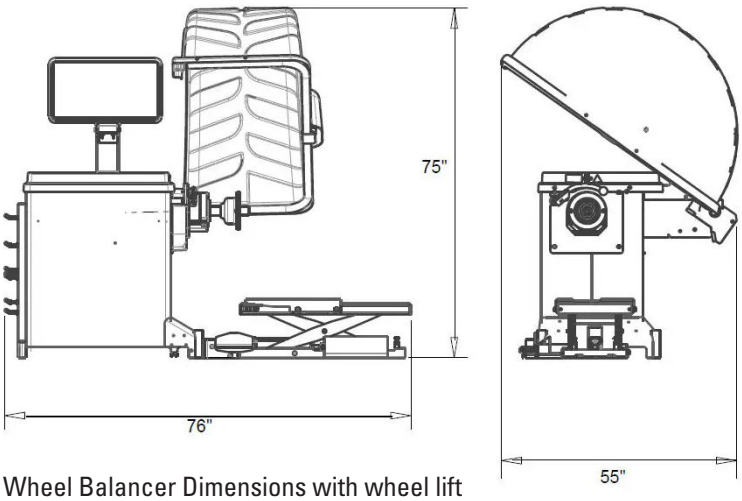

Wheel Balancer Dimensions with wheel lift

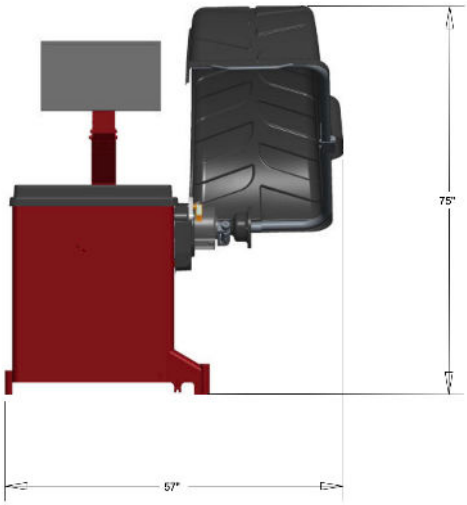

Wheel Balancer Dimensions without wheel lift

Included Accessories	
85608850	Stud - Weight Tray (3)
85609499	Double Sided Collets (2.04”-5.20”)
8309011	Calipers
85607780	Premium Wheel Weight Hammer
85610908	Premium Hub Nut
8112106	Small Pressure Cup & Rubber Lip
85608312	No Mar Ring
8112107	Spring
8113390	Scraper
85612685	Side Shadow Board

Optional Accessories	
8200000400	3-Piece Adjustable Pinplate Set for 40mm Shaft
8300000400	Light Truck Kit for 40mm Shaft
81141821	Ford ULA 3 Degree Cone
8113277C	Light Truck Cone Kit
85009945	Toyota Adapter Kit
8112421	Short Cone
85611072	Double Sided Mazda Collet
800525AUTO16	Auto Down Wheel Lift

FEATURED OPTIONAL ACCESSORIES

3-Piece Adjustable Pinplate set for 40mm Shaft

Auto Down Wheel Lift

Light Truck Kit for 40mm Shaft

E900 FEATURES

ProMatch Technology with Runout Diagnostics

ProMatch feature optimizes where the high spot of the tire and the low spot of the rim need to be marked, lined up, and mounted to minimize the vibrations caused by runout. With a diagnostic roller, the E900 measures radial runout and how “out-of-round” the wheel is. It addresses vibrations from wheel assembly shape and defect.

New Multi-Function Laser Module

The E900’s unique Multi-Function Laser Module takes distance and diameter measurements, indicates weight placement locations, and diagnoses rim defects that can impact ride quality. It’s one of the many ways we’ve made the E900 so fast and easy to use.

ProBalance Technology®

ProBalance Technology is a unique balancing algorithm and unbalance correction methodology that solves a leading cause of comebacks: residual unbalance. ProBalance Technology works discreetly in the background of every balancing cycle to eliminate these unbalances that can generate unwanted vibration.

Stop, Lock, Index

The E900 balancer automatically servos and locks the spindle in place to the position that the weight need to be placed.

LED Barrel Lighting

5W LED lights up the barrel of the wheel when the hood is lifted, increasing visibility when applying weights.

Behind the Spoke Mode

Hide tape weights behind spokes for a better appearance on performance wheels.

Sonar Width Measure

Auto-measure width, leaving no room for data entry error, no mechanical maintenance, and faster cycle time.

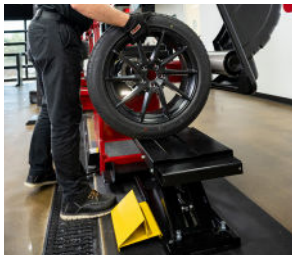

Speed Thread Pedal

At the push of a foot pedal, techs no longer hand spin the hub nut to mount and demount the wheel from the balancer shaft, reducing the time needed to support heavy wheels and speeding up the entire balancing process

For more information visit **coatscompany.com**

or call us at

800-688-6359

coats